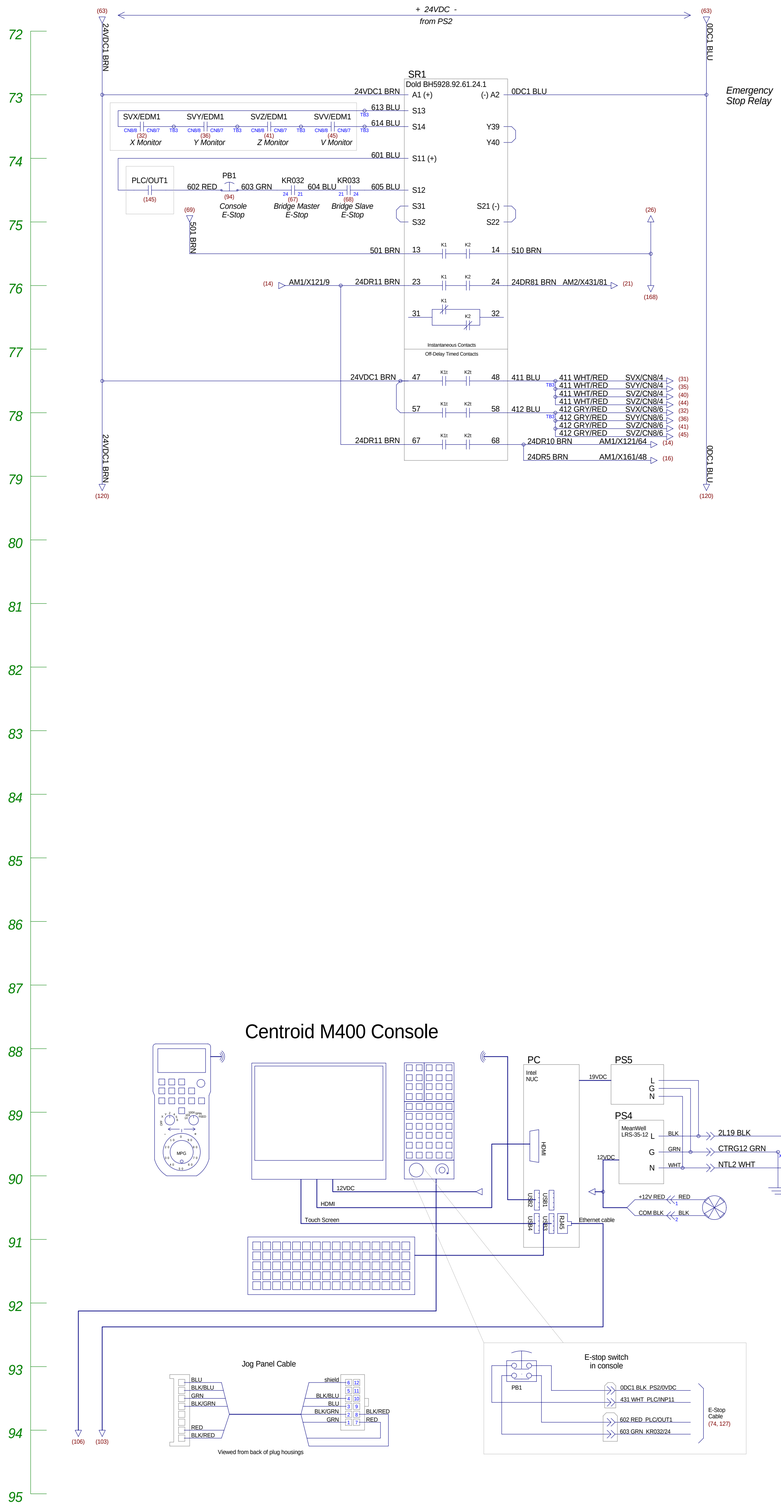

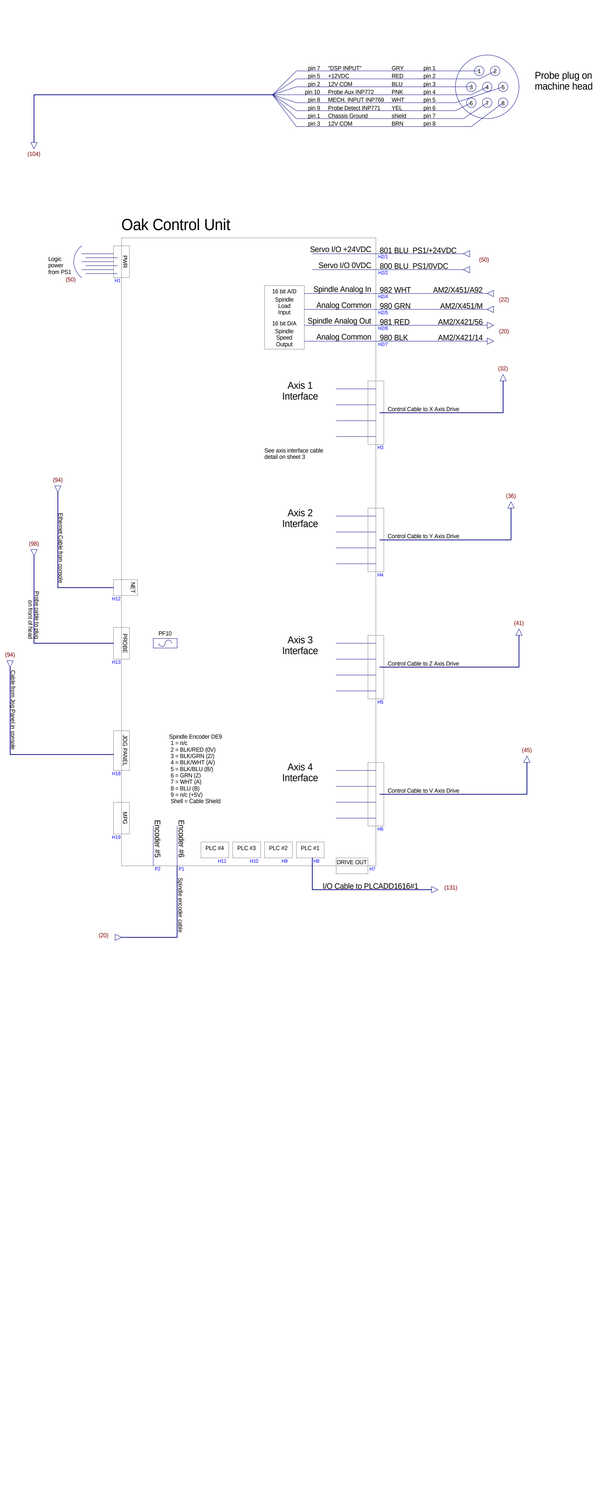

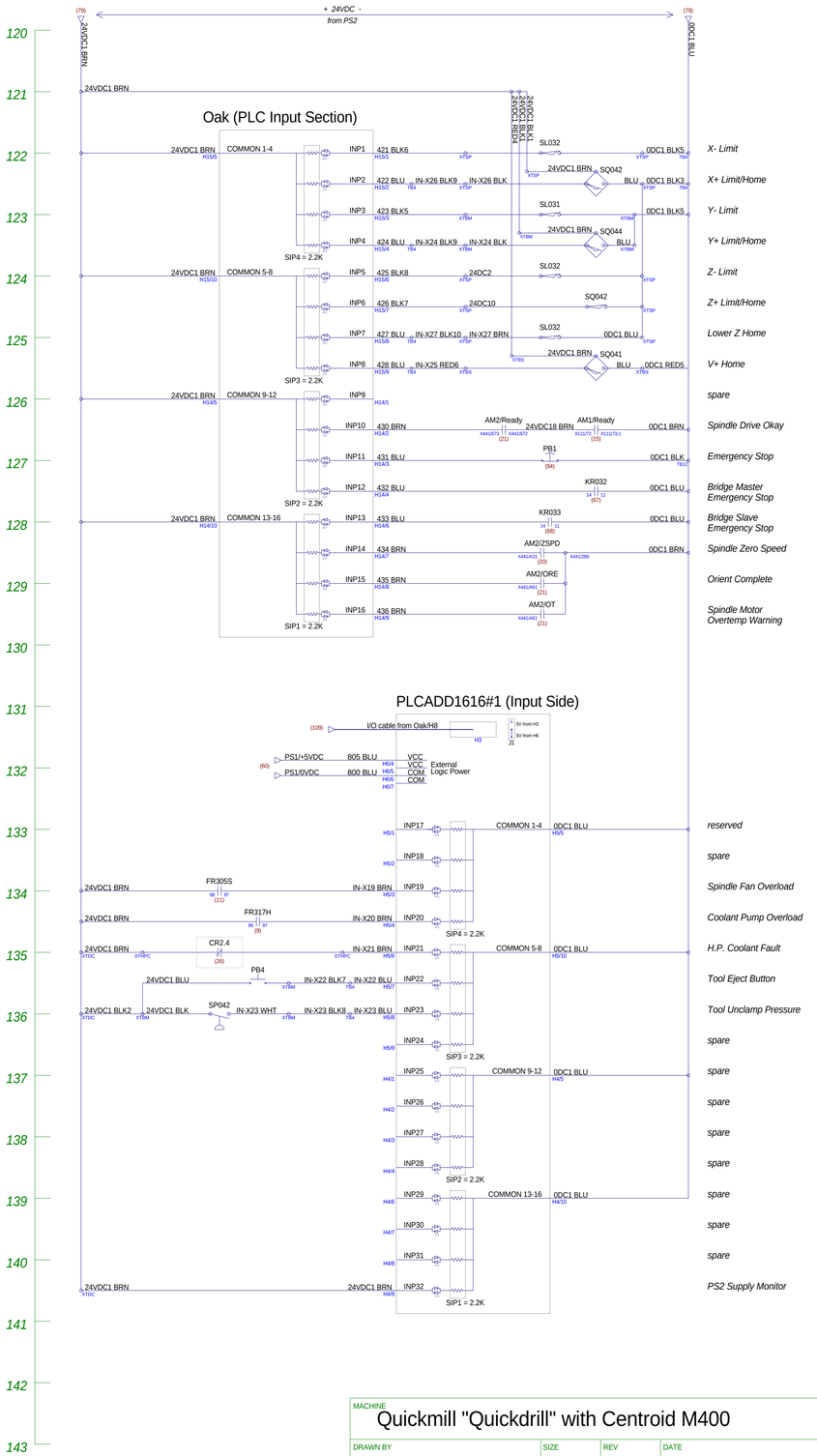

MACHINE			
Quickmill "Quickdrill" with Centroid M400			
DRAWN BY	SIZE	REV	DATE
Marc Leonard	D	2	17-Mar-2024
SCALE	SHEET		FILE
none	2 OF 3		K104810_2.VCD